DOOR NUMBER	QTY	OPENING		ACTUAL		MODEL	JAMB			MOUNTING		LOCK	PANELS WIDE	PANELS HIGH	SECTION NUMBER OPEN FOR GLASS							
		WIDTH	HEIGHT	WIDTH	HEIGHT		W	S	M	ANGLE	BRKT				1	2	3	4	5	6	7	8
						AV200																
						AV200																
						AV200																

JOB:

DISTR:

CONTR:

ARCH:

RAYNOR

NR:2904933

AlumaView – AV200, 2" Thick Extruded Aluminum

COLOR

- ☐ Clear Anodized
- ☐ Light Bronze Anodized
- ☐ Medium Bronze Anodized
- ☐ Dark Bronze Anodized
- ☐ Extra Dark Bronze Anodized
- ☐ Black Anodized
- ☐ ArmorBrite Powedercoat 187 Custom Colors

TRUSSING

- ☐ None
- ☐ Ubar (18 or 20 Gauge) (Trussing May show through Glazing)

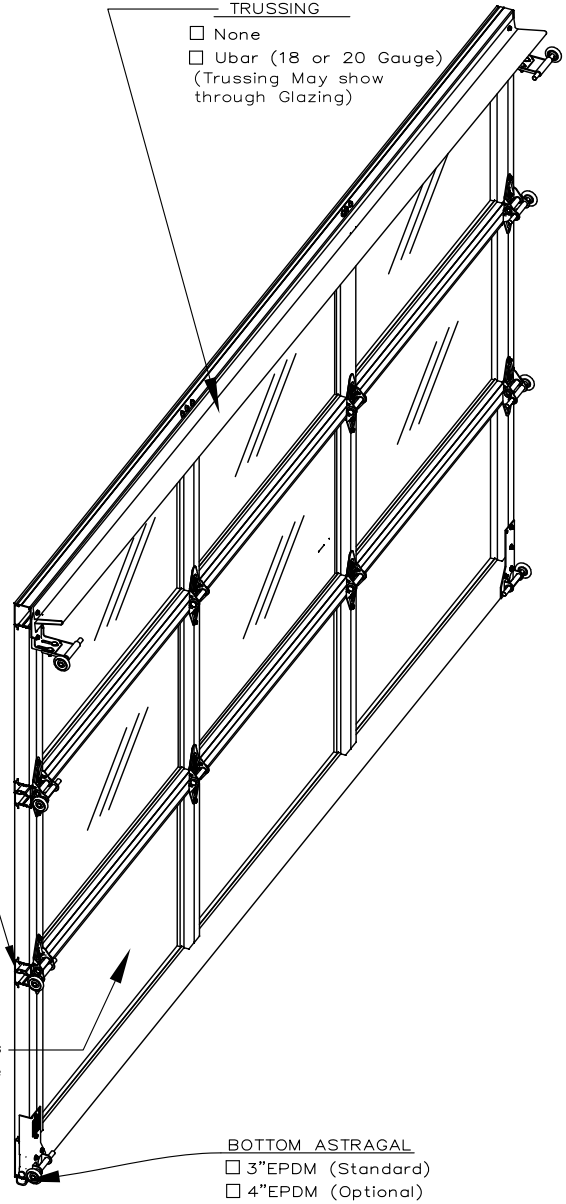

Joint Seal

- ☐ .50 Thick Aluminum Panels
- ☐ 3/8" Expanded Polystyrene Insulation(Panels Only)
- ☐ Kicker Panel

BOTTOM ASTRAGAL

- ☐ 3"EPDM (Standard)
- ☐ 4"EPDM (Optional)
- ☐ 3" Yellow (Optional)
- ☐ 3" Black EPDM (Optional)

SHEET 1 OF 2

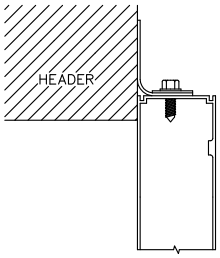

HEADER SEAL

☐

Glazing

- ☐ None
- ☐ 1/8" DSB
- ☐ 1/8" Clear Tempered Glass
- ☐ 1/4" Clear Tempered Glass
- ☐ 3/16" Clear Tempered Glass
- ☐ 1/8" Tinted Tempered Glass
- ☐ 1/4" Tinted Tempered Glass
- ☐ 1/4" Clear Glass
- ☐ 3/16" Clear Glass
- ☐ 1/4" Laminated Glass
- ☐ 1/4" Clear Wire Glass
- ☐ 1/2" Insulated DSB

LOCKS SHOULD NOT BE SUPPLIED WITH AN ELECTRIC OPERATED DOOR WITHOUT A LOCK INTERLOCK SWITCH.

- ☐ LOCKING – CREMONE TYPE BOLT ENGAGES SLOT IN TRACK, _____ HAND SIDE. FIVE PIN TUMBLER CYLINDER OUTSIDE – NIGHT LATCH INSIDE.
- ☐ LOCKING – SPRING LOADED SLIDE BOLT ENGAGES SLOT IN TRACK. OPERABLE FROM INSIDE ONLY – MAY BE MOUNTED EITHER SIDE
- ☐ LOCKING – OMIT LOCK.

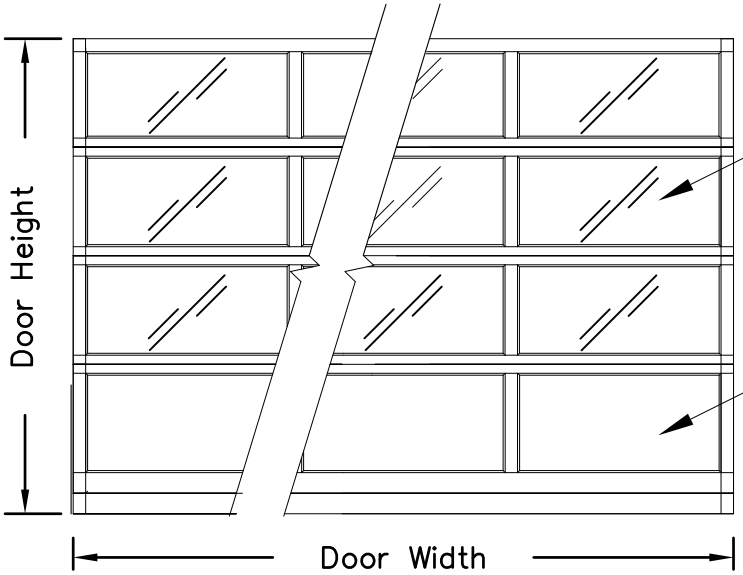

☐ FULL VIEW WINDOWS IF REQUIRED, SEE LITE NOTES AND DOOR SCHEDULE (MARK GLASS TYPE UNDER NOTES AND USE "G" IN DOOR SCHEDULE)

☐ PANELED SECTION (MARK DOOR SHECHDULE WITH "P" ACCORDINGLY)

INTERIOR ELEVATION

DOOR NUMBER	QTY	OPENING		ACTUAL		MODEL	JAMB			MOUNTING		LOCK	PANELS WIDE	PANELS HIGH	SECTION NUMBER OPEN FOR GLASS							
		WIDTH	HEIGHT	WIDTH	HEIGHT		W	S	M	ANGLE	BRKT				1	2	3	4	5	6	7	8

JOB:

DISTR:

CONTR:

ARCH:

RAYNOR

NR: 2904933

Door Model	Section Width	U-bar 20 Ga. (.82#/ft)	U-bar 18 Ga. (1.15#/ft)	Special Bottom Truss	4" Rigid Truss (1.65#/ft)	6" Rigid Truss (1.65#/ft)	18 g Box Strut (2.45 #/ft)	8" Rigid Truss (2.4#/ft)	Special 8" Rigid Truss (2.6#/ft)	Special Notes
AV200 (Standard)	12'-3" thru 14'-2"		1 Top Section							
	w/ glass over $2\#/ft^2$		1 Top Section	1 Bottom Section						

TABLE #1
PANEL CHART

PANEL CHART	
QUANTITY OF PANELS	MAXIMUM SECTION WIDTH
1	5' - 2-1/8"
2	9' - 2-1/8"
3	12' - 2-1/8"
4	16' - 2-1/8"
5	20' - 2-1/8"
6	24' - 2-1/8"

TABLE #2
LIGHT CHART

NUMBER OF LITES CHART			
STANDARD NUMBER OF LITES	MAXIMUM SECTION WIDTH	MAXIMUM NUMBER OF LITES	SECTION WIDTH
1	7' - 11-7/8"	1	N/A
2	11' - 11-7/8"	2	7' - 0" THRU 8' - 0"
3	15' - 11-7/8"	3	10' - 1" THRU 12' - 0"
4	19' - 11-7/8"	4	13' - 1" THRU 16' - 0"
5	23' - 11-7/8"	5	N/A