SECTIONAL VIEW

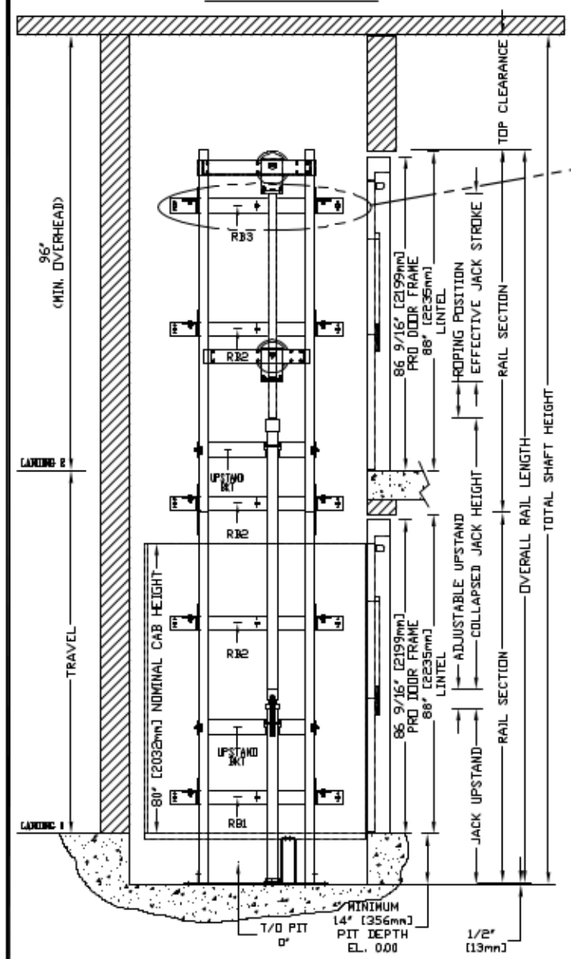

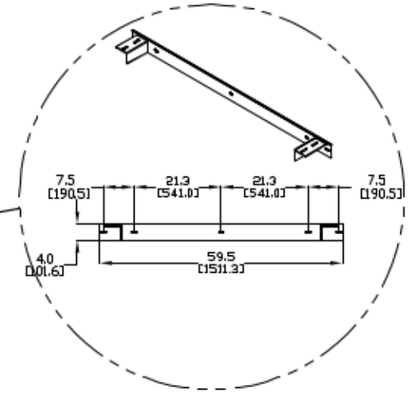

RAIL BRACKET

RAIL FORCES	
*R1	*R2
304lbf.	194lbf.
RAIL WEIGHT : 8.0 lbs / Ft	

R3 NOTE:
PIT FLOOR TO SUPPORT LOAD OF: 5.6Kips *(INCLUDES IMPACT)

FOR TOTAL PULL-OUT FORCE ON RAIL BRACKET, R1 MUST BE DOUBLED e.g. 609LBF.

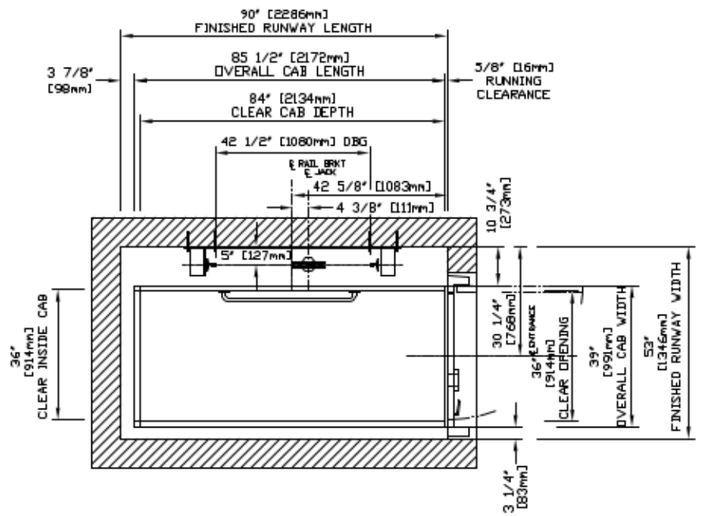

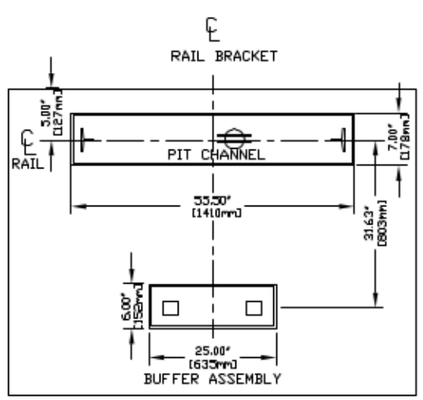

TOP RAIL BRACKET RB3	AT TOP OF HOISTWAY CONSULT YOUR SAVARIA REPRESENTATIVE FOR EXACT LOCATION	
INTERMEDIATE RAIL BRACKET RB2	48" INTERVALS ABOVE BOTTOM BRACKET	
BOTTOM RAIL BRACKET RB1	24" ABOVE PIT FLOOR	

FLOOR No. REAR	FLOOR No. FRONT	FLOOR HEIGHT
TOTAL RISE		

PIT / OVERHEAD REQUIREMENTS

MAX. SPEED (ft/min)	MIN. PIT	TOTAL TRAVEL	MINIMUM OVERHEAD
30	14" ***		96"(2439)

*** NOTE: Additional pit equipment required when over 36" [914.4mm] deep, consult your local dealer for details

DOCUMENT REVISION #1, DATE: 05/01/14

PROVISIONS BY OTHERS

*GENERAL

HOISTWAY- THE HOISTWAY MUST BE IN ACCORDANCE WITH NATIONAL CAN/CSA / US/ASME (SEE APPLIED CODE), ALL PROVINCIAL/STATE AND LOCAL CODES.

PLUMB HOISTWAY- DUE TO CLOSE RUNNING CLEARANCES OWNER/AGENT MUST ENSURE THAT HOISTWAY AND PIT (WHERE PROVIDED) ARE LEVEL, PLUMB AND SQUARE AND ARE IN ACCORDANCE WITH THE DIMENSIONS ON THESE DRAWINGS.

MINIMUM OVERHEAD CLEARANCE- OWNER/AGENT MUST ENSURE MINIMUM OVERHEAD CLEARANCE IS IN COMPLIANCE WITH CODES.

CONSTRUCTION SITE- OWNER/AGENT TO PROVIDE ALL MASONRY, CARPENTRY AND DRYWALL WORK AS REQUIRED AND SHALL PATCH AND MAKE GOOD (INCLUDING FINISH PAINTING) ALL AREAS WHERE WALLS/FLOORS MAY REQUIRE TO BE CUT, DRILLED OR ALTERED IN ANY WAY TO PERMIT THE PROPER INSTALLATION OF THE LIFT.

DIMENSIONS
CONTRACTOR/CUSTOMER TO VERIFY ALL DIMENSIONS AND REPORT ANY DISCREPANCIES TO OUR OFFICE IMMEDIATELY.

*STRUCTURAL

FLOOR/SUPPORT WALL LOADS- STRUCTURAL ENGINEER TO ASSURE THAT BUILDING AND SHAFT WILL SAFELY SUPPORT ALL LOADS IMPOSED BY THE LIFT EQUIPMENT. REFER TO THE TABLES ON THIS DRAWING FOR LOADS IMPOSED BY THE EQUIPMENT.
WHERE DOORS ARE REQUIRED- SUITABLE LINTELS MUST BE PROVIDED BY OWNER/AGENT. DOOR FRAMES ARE NOT DESIGNED TO SUPPORT OVERHEAD WALL LOADS.

*MACHINE ROOM

LOCATION / ACCESS- MACHINE ROOM LOCATED AT THE LOWEST LEVEL ADJACENT TO HOISTWAY, UNLESS SHOWN OTHERWISE ON THE LAYOUT DRAWINGS. FIELD ADJUSTMENT BY INSTALLER MAY BE NECESSARY TO MEET JOB SITE CONDITIONS OR REGULATIONS. MACHINE ROOM DOOR IS TO BE LOCKABLE AND IS TO MEET THE REQUIREMENTS OF THE AUTHORITY HAVING JURISDICTION.

SLEEVES FOR OIL & ELECTRIC LINES- FROM MACHINE ROOM TO RUNWAY AS REQUIRED. (POSITION PER INSTALLERS INSTRUCTIONS).

	DISCONNECT SIZE	TIME DELAY FUSE SIZE	VOLTS	PHASE	AMPERAGE
MOTOR & EQUIP.	60 AMPS	40 AMPS	230 VOLT	SINGLE PHASE	21 AMPS
	30 AMPS	30 AMPS	208 VOLT	THREE PHASE	15.6 AMPS
CAB LIGHTS	15 AMPS	15 AMPS	115 V	1	

*ELECTRICAL

POWER SUPPLY- (SEE SPECIFICATIONS) LOCKABLE FUSED DISCONNECT WITH AUXILIARY CONTACT TO BRAKE THE BATTERY FEED, OR CIRCUIT BREAKERS WITH A 3-POLE BREAKER FOR BATTERY FEED REQUIRED, IN COMPLIANCE WITH ELECTRICAL CODE, AS FOLLOWS:
(LOCATED ON WALL ON LOCK JAMB SIDE OF MACHINE ROOM DOOR)
PERMANENT POWER- BEFORE INSTALLATION CAN BEGIN, PERMANENT POWER MUST BE SUPPLIED.
LIGHTING- OWNER/AGENT TO ENSURE AT LEAST 9.3 FTC OR 100 LUX AMBIENT LIGHTING OVER LIFT AREA.

*ENTRANCES

FASCIA PANEL BELOW UPPER LEVEL ENTRANCE- WHERE REQUIRED, FASCIA PANEL MUST BE FASTENED TO A SOLID WALL AND BE PERPENDICULAR TO THE FLOOR AND WALLS. HOISTWAY FASCIA IS NOT SELF-SUPPORTING FOR LONG, CONTINUOUS RUNS VOID OF ENTRANCES. ADEQUATE SUPPORT FOR THE FASCIA MUST BE PROVIDED .
ENTRANCE ASSEMBLIES- ENTRANCE ASSEMBLIES MUST BE ADJUSTED TO ALIGN WITH PLATFORM AND INTERLOCK EQUIPMENT. OTHERS TO ALLOW AN ADEQUATE ROUGH OPENING.
RETURN WALLS- RETURN WALLS AT ENTRANCES MUST BE BUILT-IN BY OTHERS AFTER ENTRANCE ASSEMBLIES ARE IN PLACE. ENTRANCE ASSEMBLY MUST BE SECURELY FASTENED TO WALLS BY ELEVATOR CONTRACTOR.

NOTE B
ALL INFORMATION IS SUBJECT TO CHANGE.
PLEASE REFERENCE OUR ON-LINE DRAWINGS AT
WWW.SAVARIA.COM FOR THE MOST RECENT UPDATES

COMMERCIAL WHEELCHAIR LIFT
PROLIFT MODEL 3684 TYPE 1R

CUSTOMER:	DATE:	savaria
PROJECT:	REVISION DATE:	JOB No. / SHEET No.
LOCATION:	COMPLETED BY:	