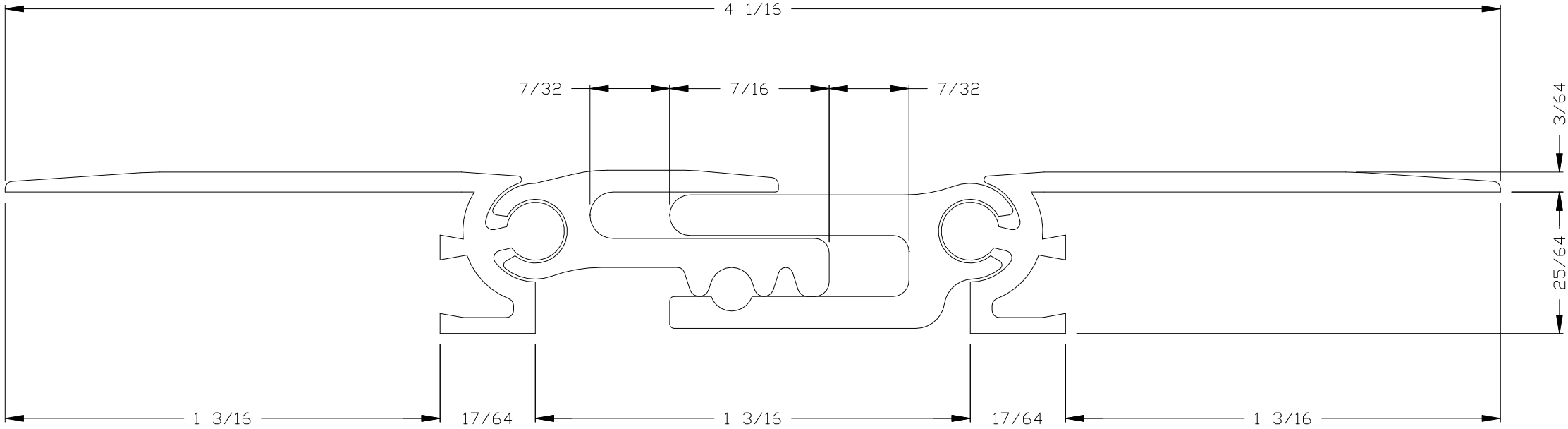Schluter®- DILEX-BTS