ALL SHOPS

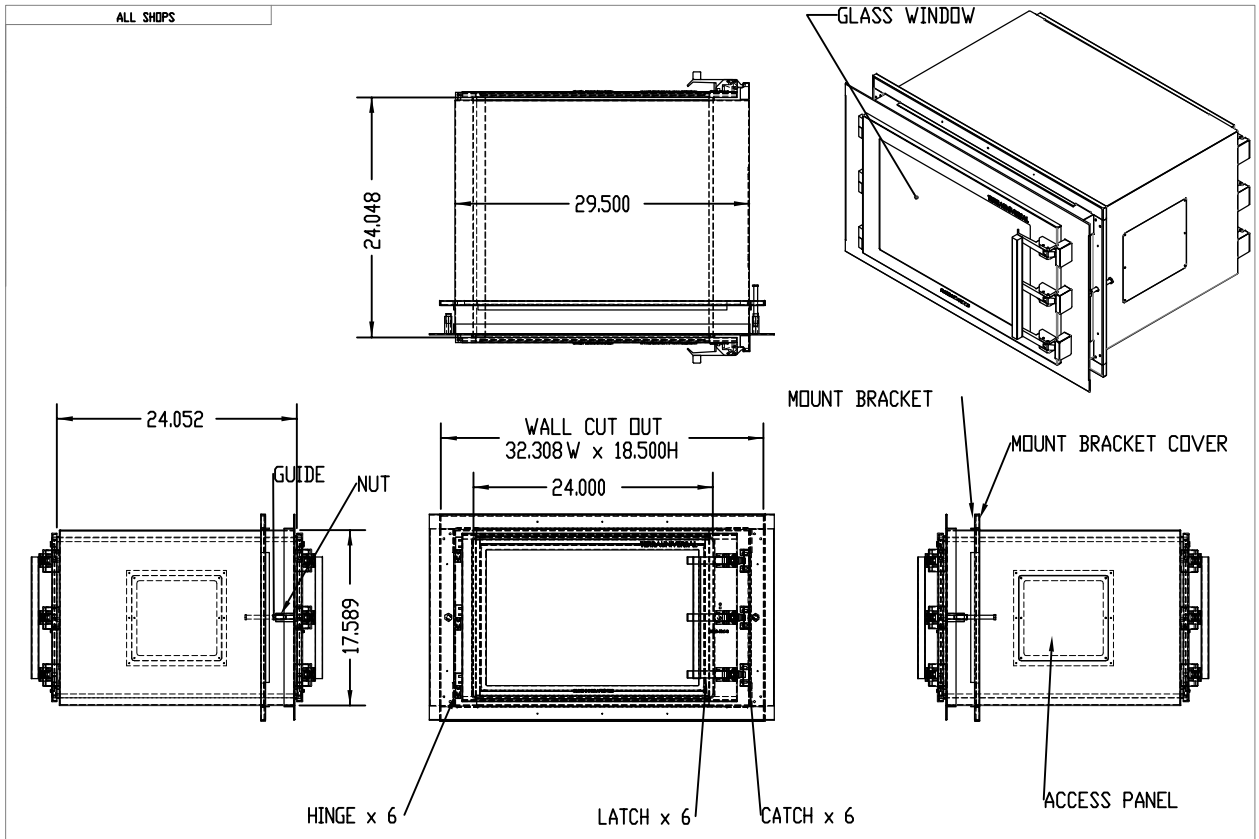

REVISIONS			
RV#	DESCRIPTION	DATE	BY
NC	INITIAL RELEASE	7/15/15	QT

MATERIAL SPEC.: 304 SS

FINISH SPEC.: EP

UNLESS OTHERWISE SPECIFIED, DIMENSIONS ARE IN INCHES

TOLERANCES ON

.XX DECIMALS ± .03 X° ± 1°

.XXX DECIMALS ± .010 X/X ± 1/64

SIGNATURES		DATE
ISSUED BY:	QUOC TRAN	7/15/15
APPROVED BY:		
REF #	90943	

Terra Universal

Proprietary & Confidential
All rights reserved by
TERRA UNIVERSAL
Disclosure or Copying Prohibited

TITLE: PASS THROUGH, BIO SAFE+
EP304SS
24Wx24Dx16H

A 2636-63C-2

SCALE

SHEET 1 OF 20