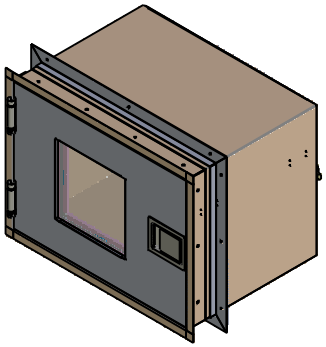

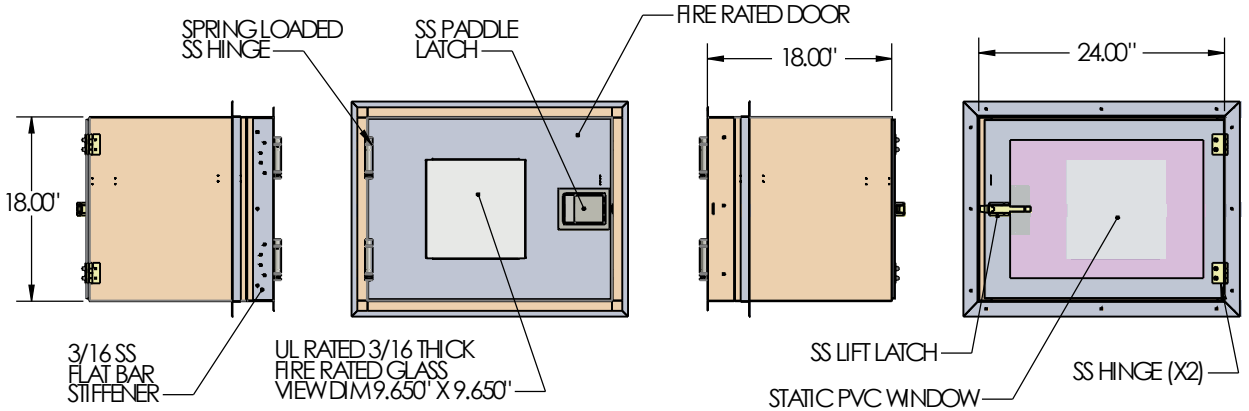

195369

Terra Universal

PROPRIETARY & CONFIDENTIAL
ALL RIGHTS RESERVED BY
TERRA UNIVERSAL
DISCLOSURE OR COPYING PROHIBITED

PASS-THROUGH, 304 SS
FIRE RATED DOOR, ELECTROPOLISHED
24"W X 18"H X 18"D