TERMS OF USE Disclaimer: This information is intended solely as a guide for use of Ross Roof Group products. Before using you should ensure that the product is suitable for use in the specific application. Nothing in this information constitutes a statement of fitness for particular purpose and appropriate expert advice is to always be obtained. Ross Roof Group makes no warranty regarding the use of this information with non - Ross Roof Group products. This drawing is the property of Ross Roof Group. It cannot be copied in any form and must be returned to Ross Roof Group upon request.

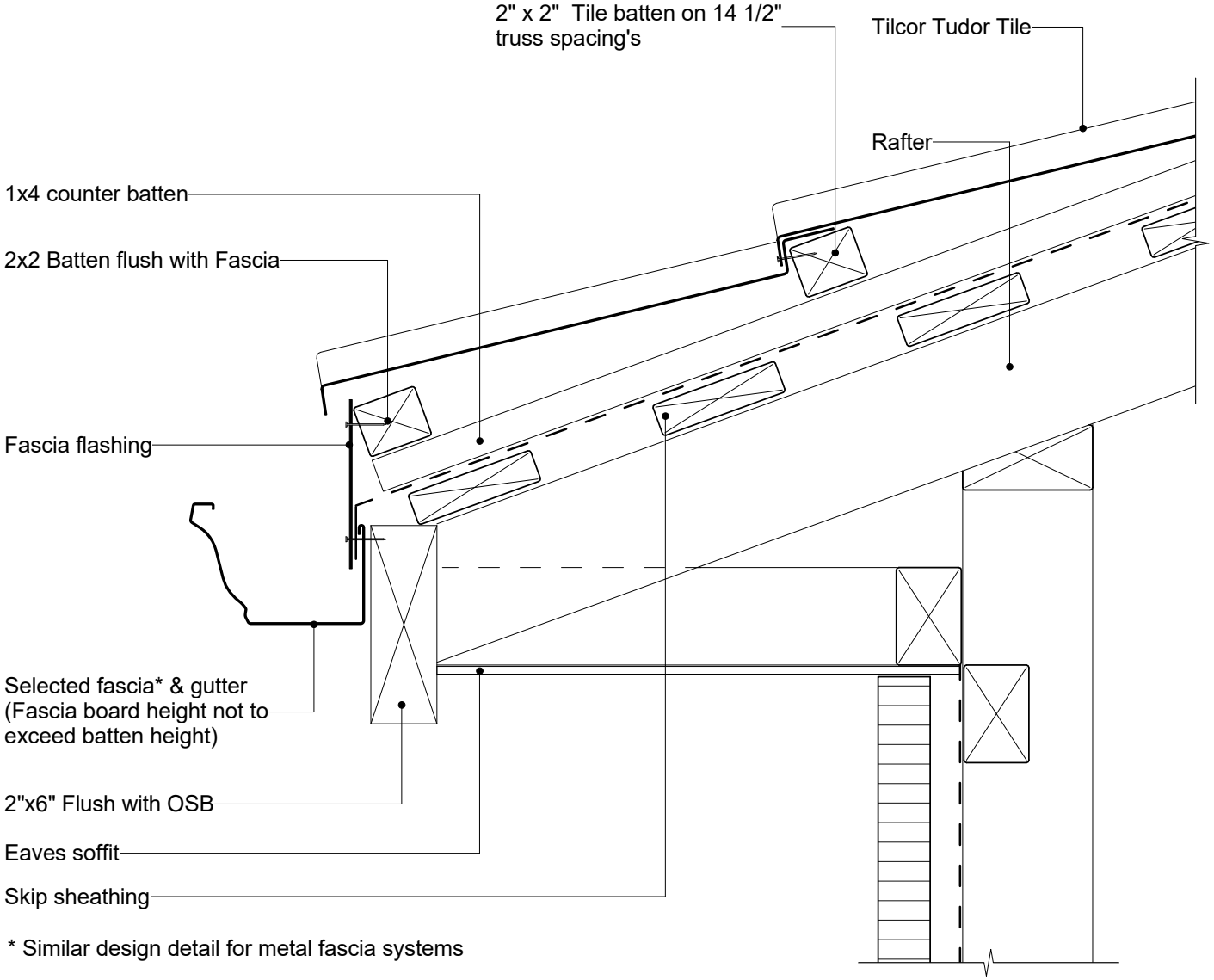

* Similar design detail for metal fascia systems

© copyright 2016 Ross Roof Group

TILCOR ROOFING SYSTEMS

Tudor

Gable-Barge Detail

Fascia Detail with Skip Sheathing

File: tilcor_usa tu130a us - fascia detail with skip sheathing	
Revision: Issue 01	Source: tilcor_usa.rvt
Scale: 1 : 5	Reference
Date: 22 Dec 2016	TU130a US