TORMAX AUTOMATIC

iMOTION 1302 OHC SWING DOOR SYSTEM

SINGLE DOOR W/TRANSOM FRAME L.H. INSWING

JOB NAME: _____ DATE: _____

DOOR LOCATION: _____ DOOR NO: _____ SHEET ___ OF ___

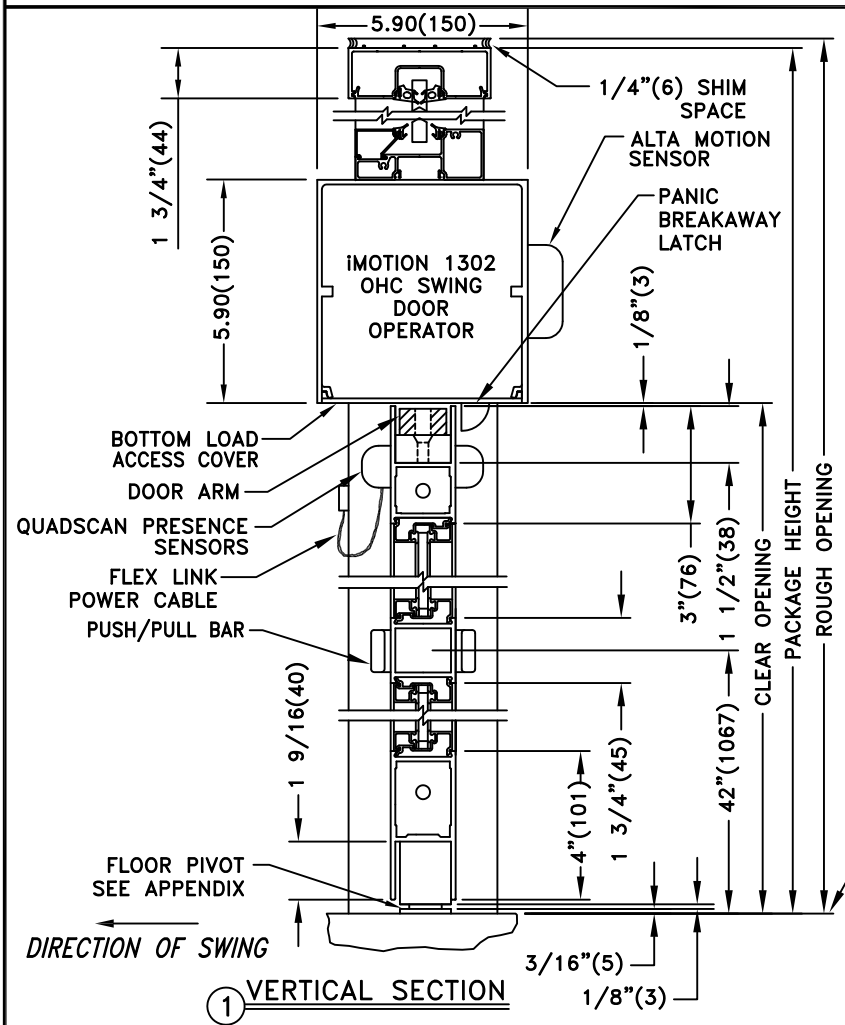

1 VERTICAL SECTION

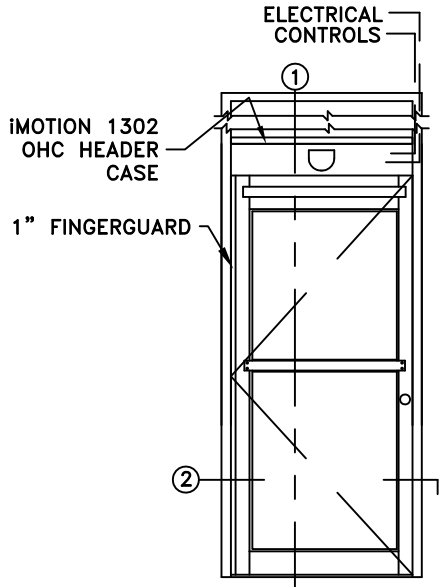

ELEVATION

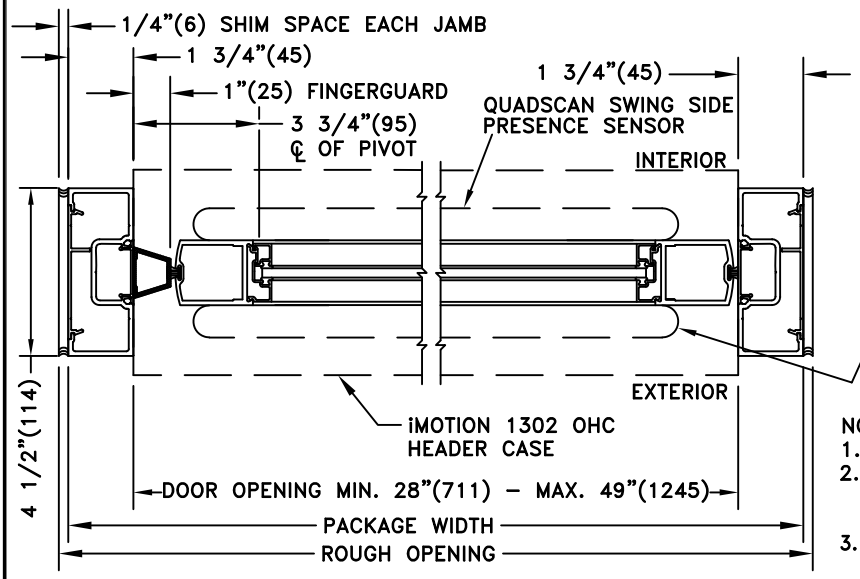

2 HORIZONTAL SECTION

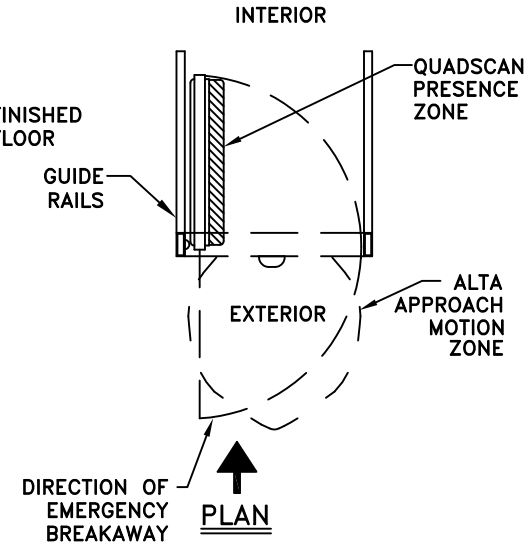

PLAN

NOTES:
1. DETAILS NOT TO SCALE.
2. ELECTRICAL REQUIREMENTS: 120VAC, 5AMPS MIN. TO OPERATOR BY ELECTRICAL CONTRACTOR.
3. 32" CLEAR DOOR OPENING REQUIRED TO MEET A.D.A. REQUIREMENTS.
4. DOORS MUST BE NON-LATCHED FOR PROPER OPERATION.
5. DOORS FRAMES AND HARDWARE BY TORMAX TECHNOLOGIES.