Colors: Black (BK)
Brown (BR)
Grey (GR)
Ivory (IV)
White (WH)

Designer (DC) Roller Shade Clutch, HM

0-155-DC-V10XX

XX=COLOR

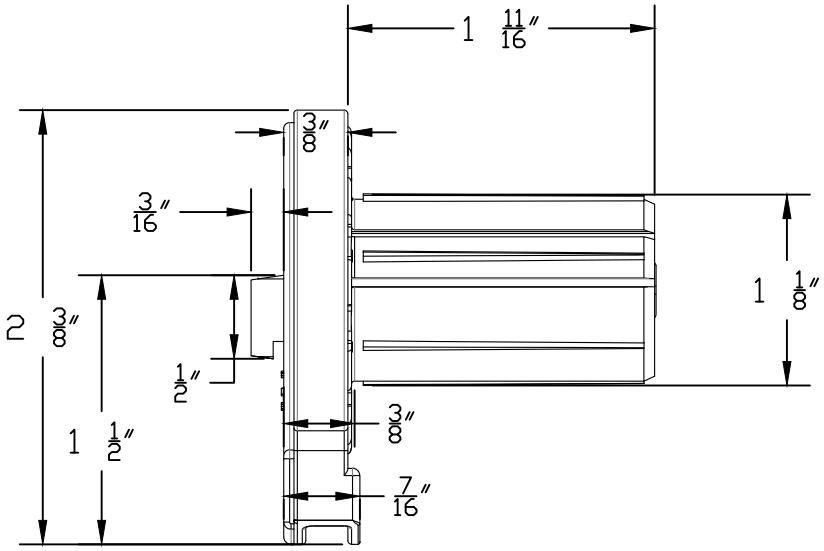

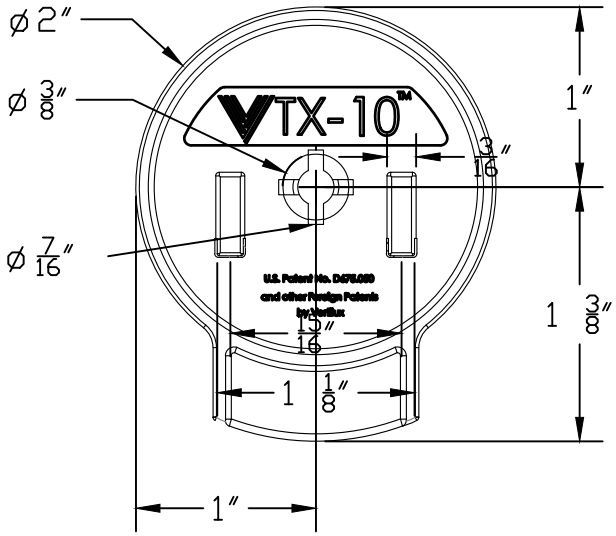

Note: Dimensions are in Inches
Tolerance is ± 0.002" /0.05 mm
It will need adapter 0-154-AD-V32XX for 1 1/4"/32mm tubes
or adapter 0-154-AD-V38XX for 1 1/2"/38mm tubes.

U.S. PATENT No. D675.050 AND OTHER FOREIGN PATENTS BY VERTILUX

Vertilux BLINDS & SHADES

MATERIAL
High Impact Nylon 6 With 30% Fiberglass

TITLE
VTX10 Hook Mount, Designer
for 1 1/8"/ 28mm Tubes

Dimensions are subject to change without notice

SHEET 1 OF 1