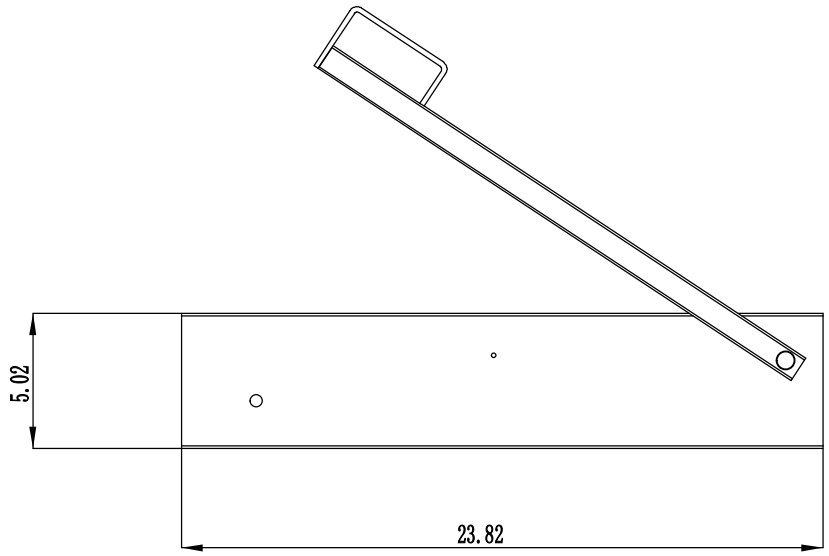

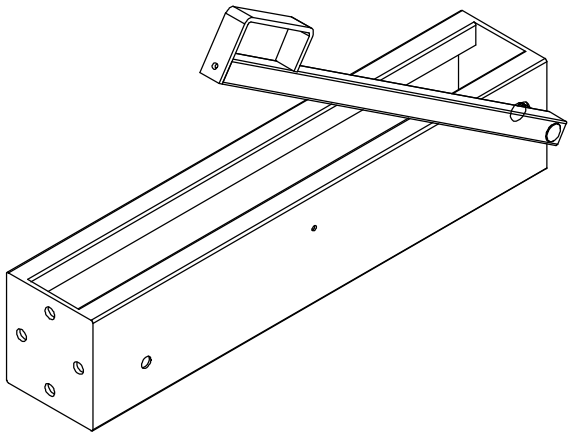

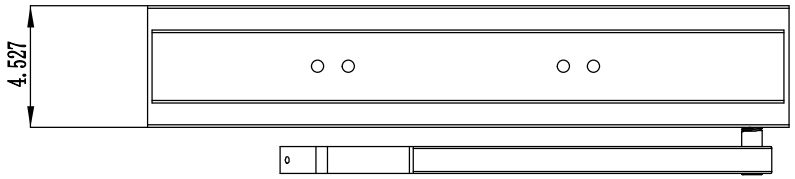

Little Parker
Module Assembly

1 1