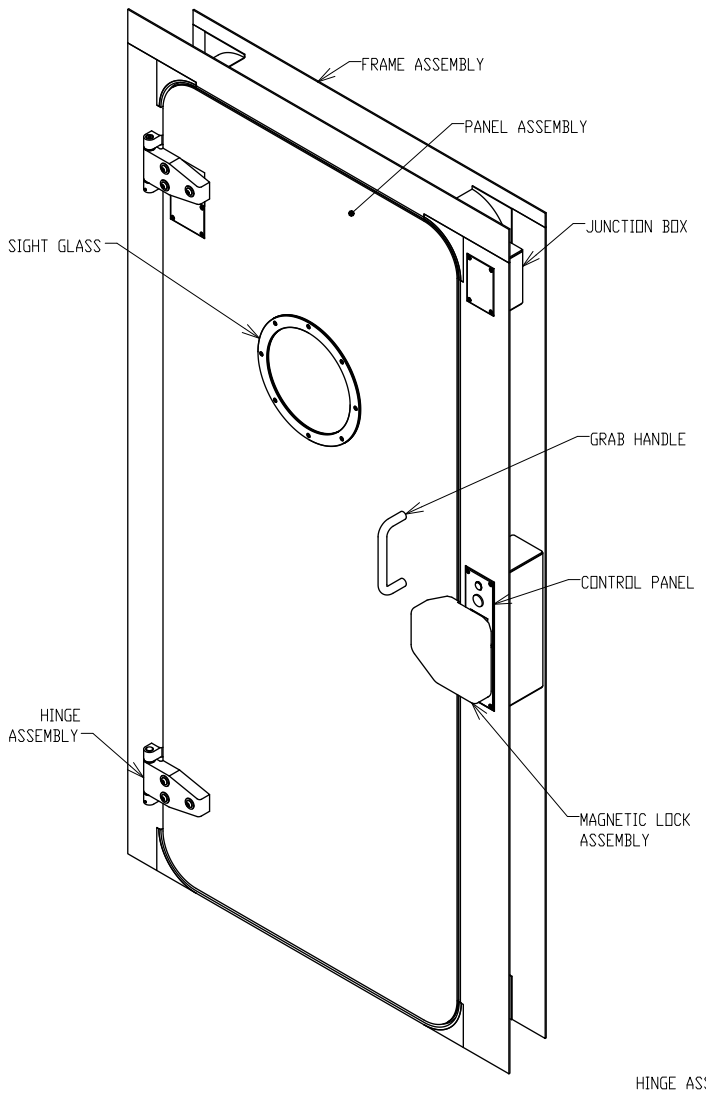

ISOMETRIC VIEW

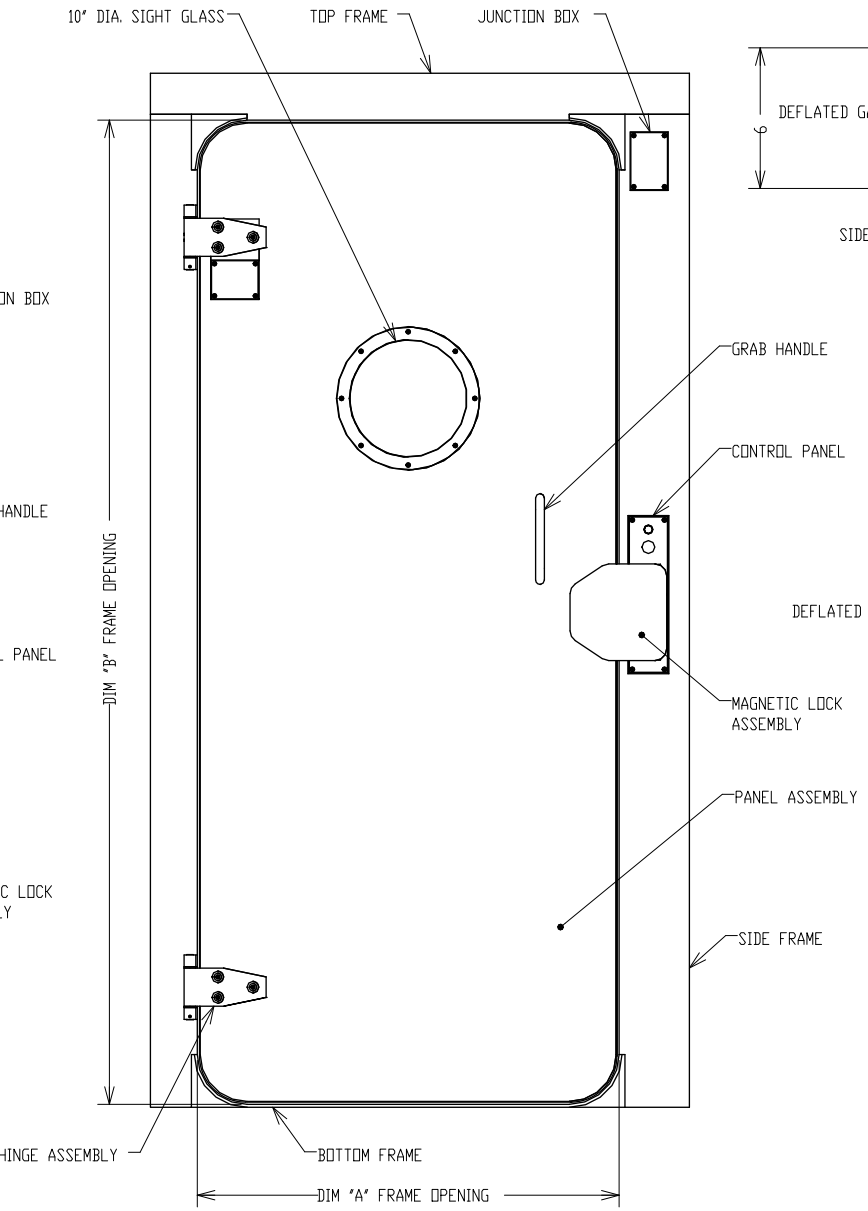

ELEVATION VIEW

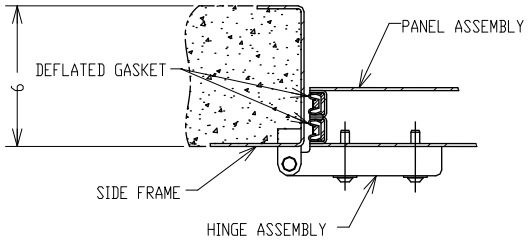

JAMB VIEW

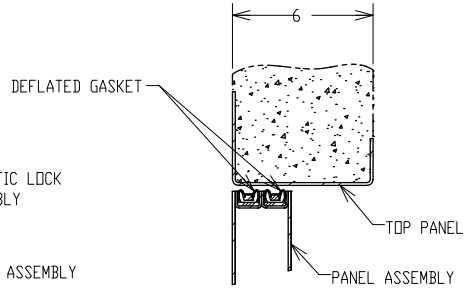

TOP SILL VIEW

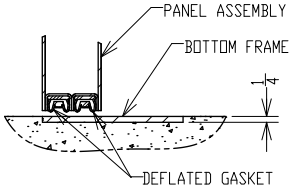

BOTTOM SILL VIEW

NOTE: ALL DIMENSIONS ARE IN INCHES.
NOT ALL VIEWS ARE TO SCALE.

THIS DRAWING CONTAINS COMPANY PROPRIETARY INFORMATION AND IS COPYRIGHTED BY WALZ & KRENZER (W&K). W&K ALLOWS USE OF THIS DRAWING IN SPECIFICATIONS AND PLANS ONLY IF W&K IS LISTED AS A QUALIFIED SUPPLIER.

WALZ & KRENZER, INC.
91 WILLENBROCK RD., UNIT B-4 OXFORD, CT. 06478
WEB SITE: www.wkdoors.com

AIRTIGHT
PRESSURE RESISTANT DOOR
(MODEL AT-BIO)