DURA GATES®
CANTILEVER GATES, EVOLVED

CGS-350.8P

Large Carriage, Monobloc Body

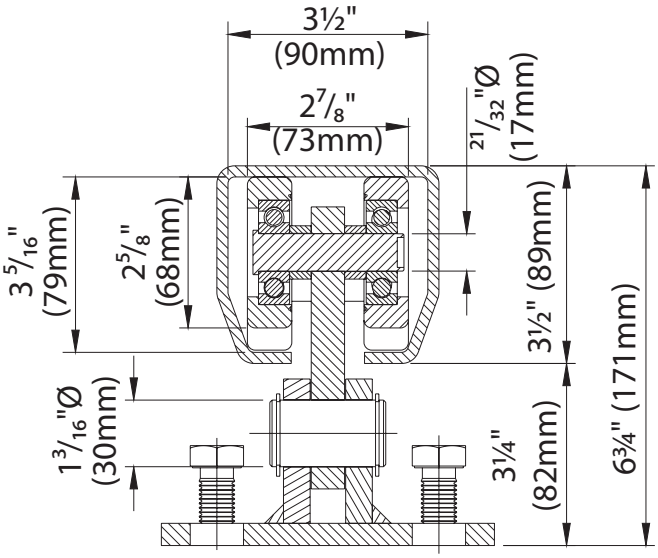

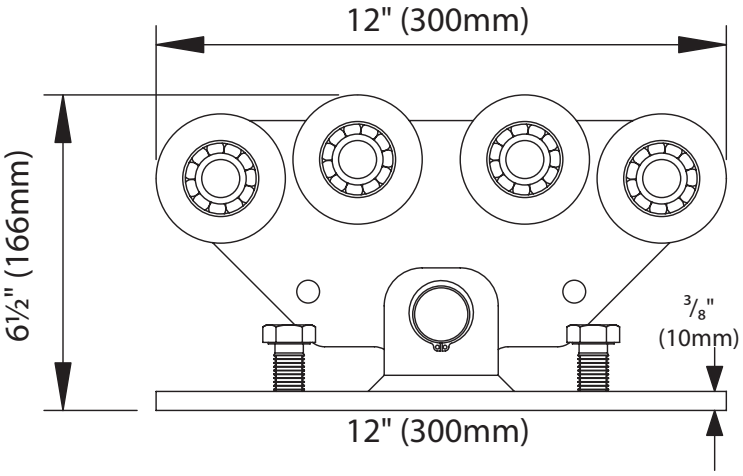

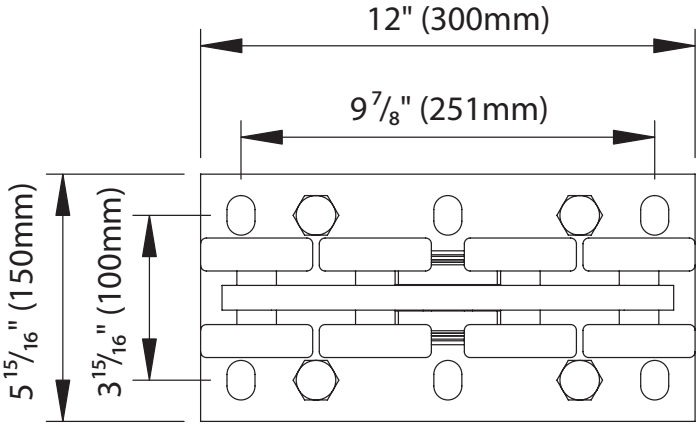

CGS-350.8P - 8 wheel carriage, monobloc body

HEIGHT		BASE PLATE LENGTH		BASE PLATE WIDTH		AIR GAP (Grade to Bottom of Track)		FULL HEIGHT (Grade to Top of Track)		BOLT HOLE SIZE		BOLT HOLE SPACING (L) (Center-to-Center)		BOLT HOLE SPACING (W) (Center-to-Center)		CARRIAGE PLATE THICKNESS	
Inch	mm	Inch	mm	Inch	mm	Inch	mm	Inch	mm	Inch	mm	Inch	mm	Inch	mm	Inch	mm
6½	166	12	300	5 15/16	150	3¼	82	6¾	171	⅞ x ⅝	24x17	9⅞	251	3 15/16	100	⅜	10

Illustrations not to scale and are for reference only. Imperial units shown are for reference only, use millimeters for most accurate sizes.

All pictures, technical drawings and related specifications belong to Fratelli Comunello Spa and they are defended by rules of copyright.
All uses not expressly authorized will be legally prosecuted. Product specifications are subject to change without notice.

AIDI ARCHITECTURAL IRON DESIGNS, INC.
2E Chimney Rock Road • Bridgewater, NJ 08807 | Ph: (908) 757-2323
Fax: (908) 757-3439 | www.duragates.com | info@duragates.com

Manufactured by COMUNELLO LIFE MADE EASY

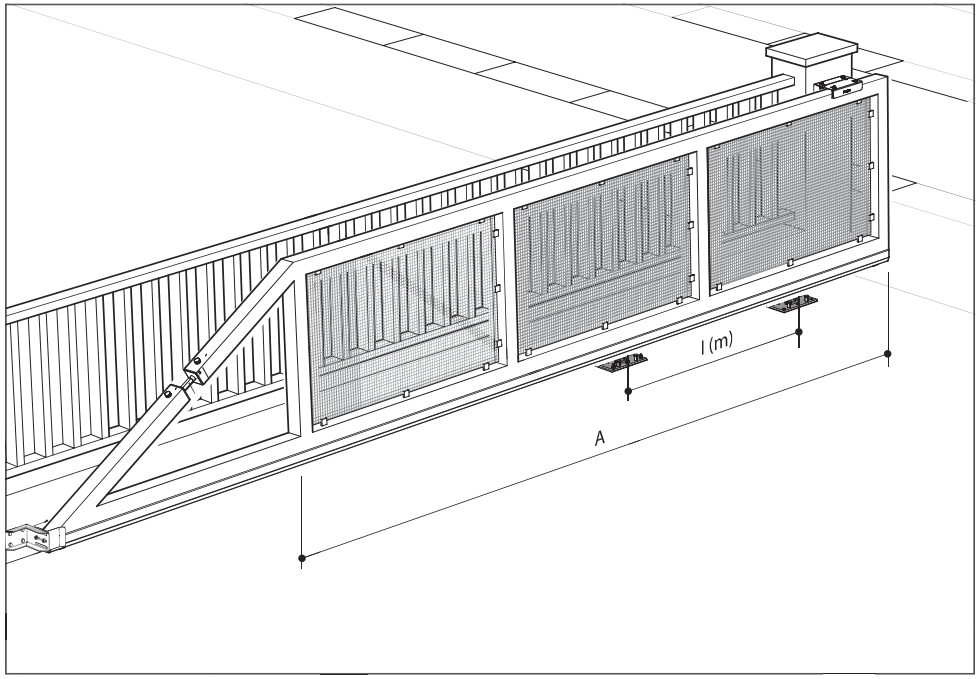

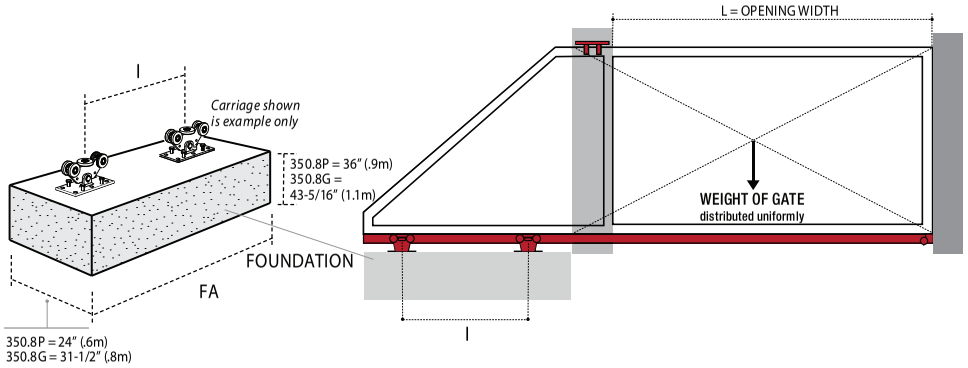

CGS 350.8 Piccolo (F1max=2000 Kg)										
	L=4 m		L=5 m		L=6 m		L=7 m		L=8 m	
Weight (Kg)	FA (M)	l (M)	FA (M)	l (M)	FA (M)	l (M)	FA (M)	l (M)	FA (M)	l (M)
400	1,40	0,70	1,60	0,90	1,70	1,00	1,90	1,20	2,10	1,40
450	1,50	0,80	1,70	1,00	1,90	1,20	2,10	1,40	2,30	1,60
500	1,60	0,90	1,80	1,10	2,10	1,40	2,30	1,60	2,60	1,90
550	1,70	1,00	2,00	1,30	2,20	1,50	2,50	1,80	2,80	2,10
600	1,80	1,10	2,10	1,40	2,40	1,70	2,70	2,00	3,00	2,40
650	2,00	1,30	2,30	1,60	2,60	1,90	3,00	2,30	3,30	2,60
700	2,10	1,40	2,50	1,80	2,80	2,10	3,20	2,50	3,60	2,90
750	2,30	1,60	2,70	2,00	3,10	2,40	3,50	2,80	3,90	3,30
800	2,40	1,80	2,90	2,20	3,30	2,60	3,80	3,10	4,30	3,60

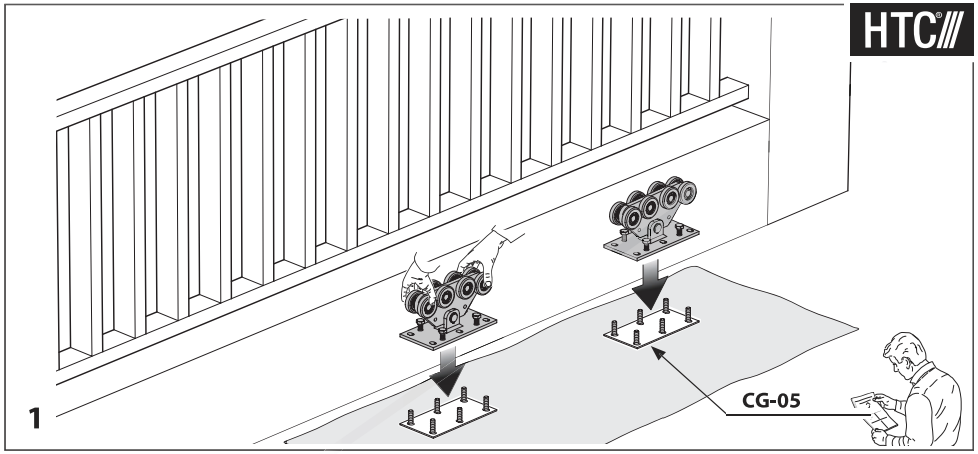

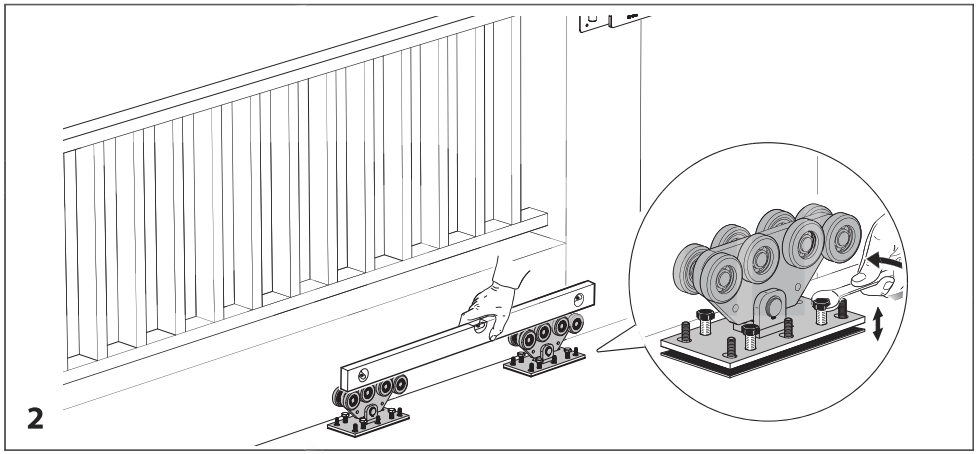

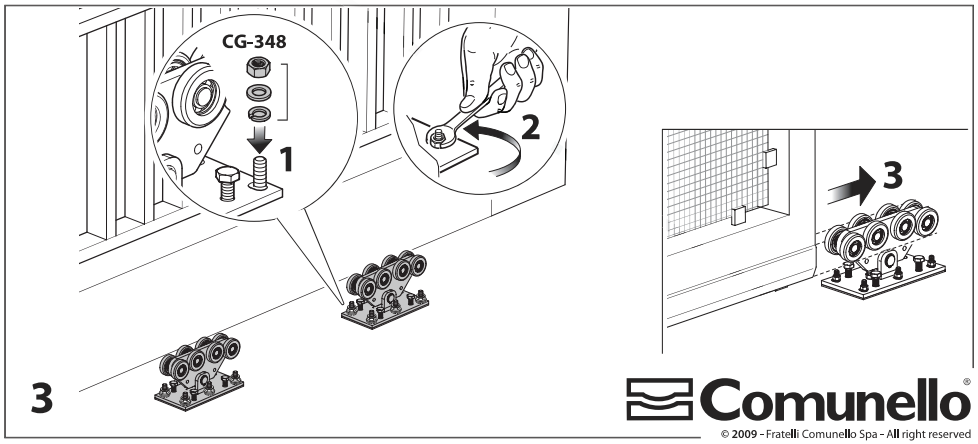

Comunello

© 2009 - Fratelli Comunello Spa - All right reserved