Product and Company Identification

Product Name: **DE Series**

Manufacturer's Name: **Prospec Specialties Inc.**
Suite 400, 3601, Highway 7,
Markham ON, L3R 0M3, Canada

Emergency #: (888) 749-8456

Date Prepared: June, 2013

Table 1: System Details

Application	Code	JO	SH	SW	BO	WH	± Movement (%)			Load (Ton)
			Millimeter				Horizontal	Vertical	Shear	
Straight (S)	DES 01	25	38	117	83	*	50	25	Excellent	9
	DES 02	51	38	140	83	*	50	25	Excellent	9
	DES 03	76	38	197	102	*	50	25	Excellent	9
	DES 04	102	38	222	102	*	50	25	Excellent	9
	DES 06	152	38	342	133	*	50	25	Excellent	6
	DES 08	203	38	457	165	*	50	25	Excellent	6
Corner (C)	DEC 01	25	38	70	83	50	25	25	Excellent	9
	DEC 02	51	38	95	83	50	25	25	Excellent	9
	DEC 03	76	38	137	102	50	25	25	Excellent	9
	DEC 04	102	38	162	102	50	25	25	Excellent	9
	DEC 06	152	38	248	133	50	25	25	Excellent	6
	DEC 08	203	38	331	165	50	25	25	Excellent	6

JO = Joint Opening **SH =** System Height **SW =** Sight Width
WH = Wall Height

<u>Key to System Features (Straight Application)</u>

1. Continuous Aluminum Center Plate, Grade 6061-T6
2. Continuous Aluminum Recessed frame, Grade 6061-T6
3. Steel Centering Bar
4. Compression Spring Assembly
5. Hex Head Concrete Anchor
6. Back fill (by others)
7. Concrete Slab (by others)

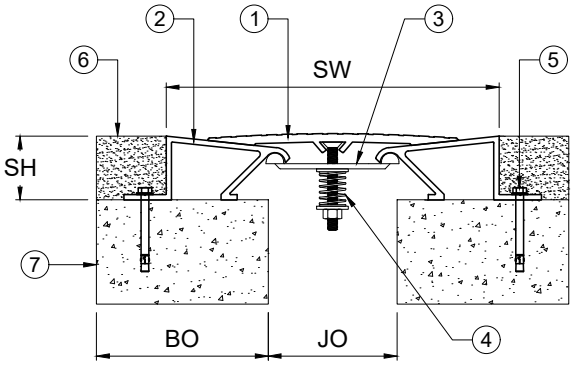

Key to System Features (Corner Application)
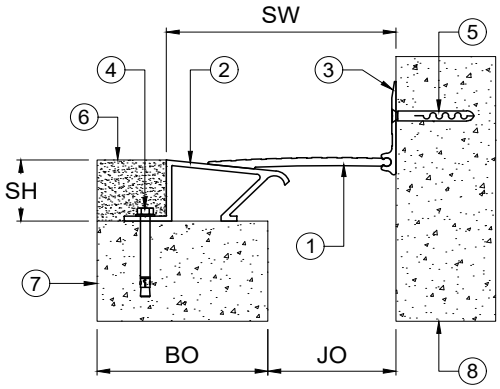
1. Continuous Aluminum Half Plate, Grade 6061-T6
2. Continuous Aluminum Recessed Frame, Grade 6061-T6
3. Continuous Aluminum Flush Wall Frame, Grade 6061 - T6
4. Hex Head Concrete Anchor
5. Flat Head Concrete Screw
6. Back fill (by others)
7. Concrete Slab (by others)
8. Concrete Wall (by others)