ECLIPSE AUTO SLIM DOORS Model TYPE 1L

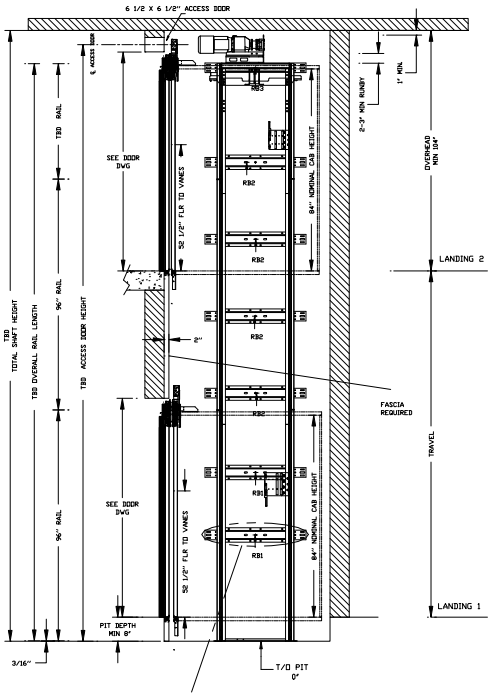

LOAD BEARING WALL (SEE PLANNING GUIDE)

CANNOT HAVE HABITABLE SPACE BELOW PIT

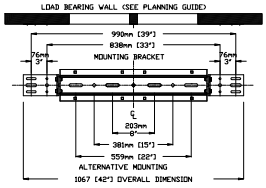

MOUNTING BRACKET

4 WALL ANCHOR POINTS MIN PER BRACKET
2 PER SIDE OF RAIL BRACKET CENTER LINE
PULL OUT FORCE PER FASTENER 69 kg [152 LBS]

FINAL RAIL BRACKET	RB3	BELOW THE MOTOR CONSULT YOUR CONCORD REPRESENTATIVE FOR EXACT LOCATION
INTERMEDIATE RAIL BRACKET	RB2	32"[813mm] INTERVALS AFTER 2nd BOTTOM BRACKET
BOTTOM RAIL BRACKET	RB1	44" [1118mm] & 71" [1804MM] ABOVE PIT FLOOR

RAIL FORCES

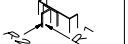

* R1	* R2
138.2 kg [304 lbf]	88.2 kg [194 lbf]
RAIL ASSY WEIGHT:	24.5 kg / m [18.0 lbs / ft]

PIT FORCE: R3

PIT FLOOR TO SUPPORT LOAD OF(INCLUDES IMPACT)
2909 kg
[6400 lbs]

ENTRANCE

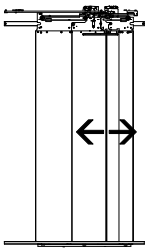

CHARACTERISTICS

CAB DOOR TYPE: AUTO SLIM 2 SPEED DOORS

ENTRANCE DOOR TYPE: AUTO SLIM 2 SPEED DOORS

2 SPEED DOORS FINISH: PAINT OR STAINLESS STEEL

FULLY AUTOMATIC OPERATION TO OPEN THE DOORS UPON ARRIVAL AT THE LANDING

LIGHTWEIGHT ALUMINUM SILL

EMERGENCY BACK-UP BATTERY SYSTEM

INFRARED DETECTION SYSTEM TO RETRACT DOORS BEFORE HITTING AN OBSTRUCTION

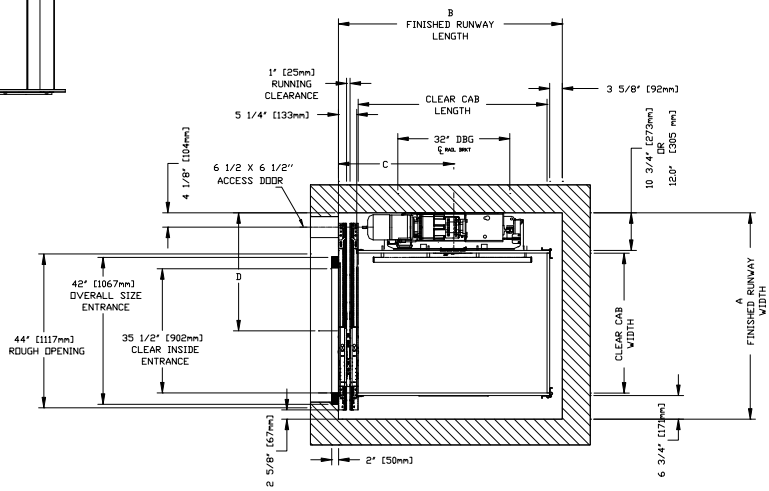

CLEAR INSIDE CAB WIDTH		CLEAR INSIDE CAB LENGTH		A FINISHED RUNWAY WIDTH		B FINISHED RUNWAY LENGTH		C RAIL CENTER LINE		D DOOR CENTER LINE	
mm	Inches	mm	Inches	mm	Inches	mm	Inches	mm	Inches	mm	Inches
914	36	1219	48	1448	57	1473	58	787	31	787	31
914	36	1372	54	1448	57	1626	64	838	33	787	31
914	36	1524	60	1448	57	1778	70	914	36	787	31
1016	40	1372	54	1499	59	1626	64	838	33	857	33.75

DOCUMENT REVISION 001, DATE: 11/18/10

ENTRANCE SIDE LEGEND

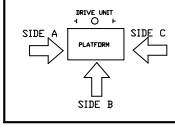

RESIDENTIAL ELEVATOR

ECLIPSE SLIMS DOORS TYPE 1L

ALL INFORMATION IS SUBJECT TO CHANGE.
PLEASE REFERENCE OUR ON-LINE DRAWINGS AT
www.savaria.com FOR THE MOST RECENT UPDATES

THE INFORMATION DISCLOSED HEREIN IS THE EXCLUSIVE PROPERTY OF
savaria.
AND MAY NOT BE USED BY OTHERS WITHOUT PRIOR WRITTEN CONSENT

SHEET# 1/1